Centre No.						Paper Reference							Surname	Initial(s)
Candidate No.						6	6	7	8	/	0	1	Signature	

Paper Reference(s)

6678/01

Edexcel GCE

Mechanics M2

Advanced/Advanced Subsidiary

Friday 28 January 2011 – Morning

Time: 1 hour 30 minutes

Examiner's use only

Team Leader's use only

Question Number	Leave Blank
1	
2	
3	
4	
5	
6	
7	
8	
Total	

Materials required for examination
Mathematical Formulae (Pink)

Items included with question papers
Nil

Candidates may use any calculator allowed by the regulations of the Joint Council for Qualifications. Calculators must not have the facility for symbolic algebra manipulation, differentiation and integration, or have retrievable mathematical formulae stored in them.

Instructions to Candidates

In the boxes above, write your centre number, candidate number, your surname, initials and signature.
Check that you have the correct question paper.
Answer ALL the questions.
You must write your answer to each question in the space following the question.
Whenever a numerical value of g is required, take $g = 9.8$ m s^{-2}.
When a calculator is used, the answer should be given to an appropriate degree of accuracy.

Information for Candidates

A booklet 'Mathematical Formulae and Statistical Tables' is provided.
Full marks may be obtained for answers to ALL questions.
The marks for individual questions and the parts of questions are shown in round brackets: e.g. **(2)**.
There are 8 questions in this question paper. The total mark for this paper is 75.
There are 28 pages in this question paper. Any blank pages are indicated.

Advice to Candidates

You must ensure that your answers to parts of questions are clearly labelled.
You should show sufficient working to make your methods clear to the examiner.
Answers without working may not gain full credit.

This publication may be reproduced only in accordance with Edexcel Limited copyright policy.
©2011 Edexcel Limited.

Printer's Log. No.
N35408A
W850/R6678/57570 5/5/3/3/2

N 3 5 4 0 8 A 0 1 2 8

Turn over

edexcel
advancing learning, changing lives

https://xtremepape.rs/

Leave blank

1. A cyclist starts from rest and moves along a straight horizontal road. The combined mass of the cyclist and his cycle is 120 kg. The resistance to motion is modelled as a constant force of magnitude 32 N. The rate at which the cyclist works is 384 W. The cyclist accelerates until he reaches a constant speed of v m s^{-1}.

Find

(a) the value of v,

(3)

(b) the acceleration of the cyclist at the instant when the speed is 9 m s^{-1}.

(3)

https://xtremepape.rs/

Leave blank

Question 1 continued

Q1

(Total 6 marks)

https://xtremepape.rs/

Leave blank

2. A particle of mass 2 kg is moving with velocity $(5\mathbf{i}+\mathbf{j})$ m s^{-1} when it receives an impulse of $(-6\mathbf{i}+8\mathbf{j})$ N s. Find the kinetic energy of the particle immediately after receiving the impulse.

(5)

N 3 5 4 0 8 A 0 4 2 8

https://xtremepape.rs/

Leave blank

Question 2 continued

Q2

(Total 5 marks)

https://xtremepape.rs/

Leave blank

3. A particle moves along the x-axis. At time $t = 0$ the particle passes through the origin with speed 8 m s^{-1} in the positive x-direction. The acceleration of the particle at time t seconds, $t \geqslant 0$, is $(4t^3 - 12t)$ m s^{-2} in the positive x-direction.

Find

(a) the velocity of the particle at time t seconds,

(3)

(b) the displacement of the particle from the origin at time t seconds,

(2)

(c) the values of t at which the particle is instantaneously at rest.

(3)

https://xtremepape.rs/

Leave blank

Question 3 continued

https://xtremepape.rs/

Leave blank

Question 3 continued

https://xtremepape.rs/

Leave blank

Question 3 continued

Q3

(Total 8 marks)

https://xtremepape.rs/

Leave blank

4.

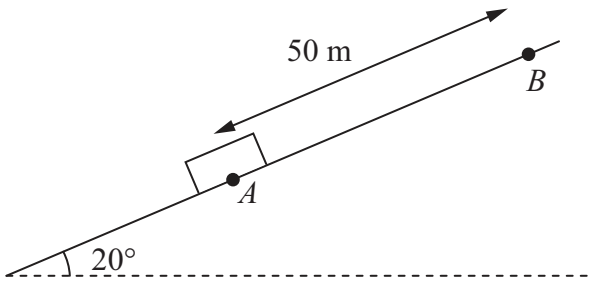

Figure 1

A box of mass 30 kg is held at rest at point A on a rough inclined plane. The plane is inclined at 20° to the horizontal. Point B is 50 m from A up a line of greatest slope of the plane, as shown in Figure 1. The box is dragged from A to B by a force acting parallel to AB and then held at rest at B. The coefficient of friction between the box and the plane is $\frac{1}{4}$. Friction is the only non-gravitational resistive force acting on the box. Modelling the box as a particle,

(a) find the work done in dragging the box from A to B.

(6)

The box is released from rest at the point B and slides down the slope. Using the work-energy principle, or otherwise,

(b) find the speed of the box as it reaches A.

(5)

N 3 5 4 0 8 A 0 1 0 2 8

https://xtremepape.rs/

Leave blank

Question 4 continued

https://xtremepape.rs/

Leave blank

Question 4 continued

https://xtremepape.rs/

Leave blank

Question 4 continued

(Total 11 marks)

Q4

https://xtremepape.rs/

Leave blank

5.

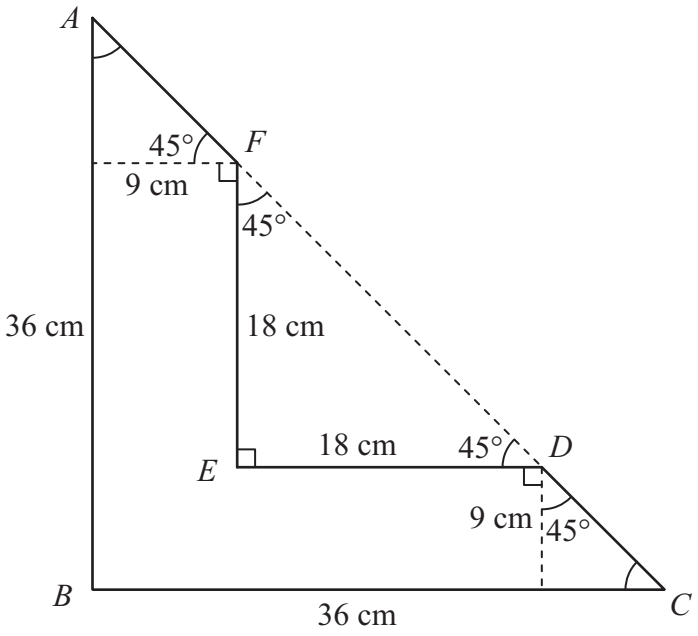

Figure 2

The uniform L-shaped lamina *ABCDEF*, shown in Figure 2, has sides *AB* and *FE* parallel, and sides *BC* and *ED* parallel. The pairs of parallel sides are 9 cm apart. The points *A*, *F*, *D* and *C* lie on a straight line.

$AB = BC = 36$ cm, $FE = ED = 18$ cm. $\angle ABC = \angle FED = 90°$, and $\angle BCD = \angle EDF = \angle EFD = \angle BAC = 45°$.

(a) Find the distance of the centre of mass of the lamina from

(i) side *AB*,

(ii) side *BC*.

(7)

The lamina is freely suspended from *A* and hangs in equilibrium.

(b) Find, to the nearest degree, the size of the angle between *AB* and the vertical.

(3)

N 3 5 4 0 8 A 0 1 4 2 8

https://xtremepape.rs/

Leave blank

Question 5 continued

https://xtremepape.rs/

Leave blank

Question 5 continued

https://xtremepape.rs/

Leave blank

Question 5 continued

(Total 10 marks)

Q5

https://xtremepape.rs/

Leave blank

6. [*In this question, the unit vectors* **i** *and* **j** *are in a vertical plane,* **i** *being horizontal and* **j** *being vertically upwards.*]

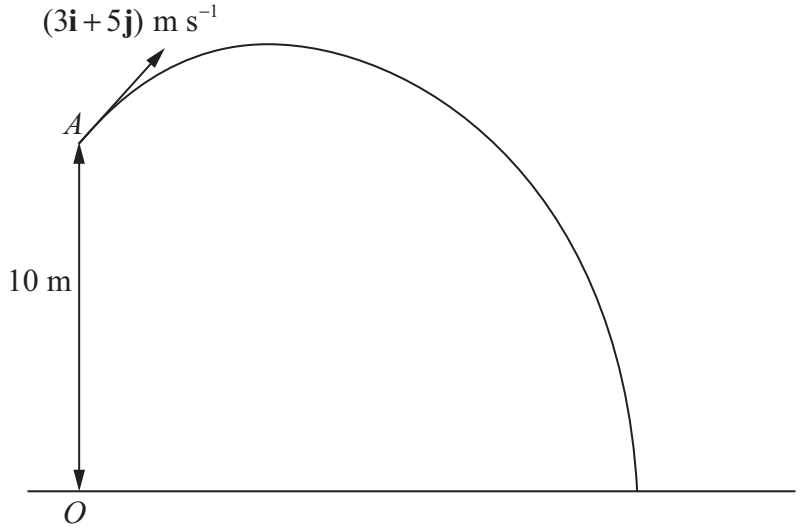

Figure 3

At time $t = 0$, a particle P is projected from the point A which has position vector $10\mathbf{j}$ metres with respect to a fixed origin O at ground level. The ground is horizontal. The velocity of projection of P is $(3\mathbf{i}+5\mathbf{j})$ m s^{-1}, as shown in Figure 3. The particle moves freely under gravity and reaches the ground after T seconds.

(a) For $0 \leqslant t \leqslant T$, show that, with respect to O, the position vector, $\mathbf{r}$ metres, of P at time t seconds is given by

$$\mathbf{r} = 3t\mathbf{i} + (10 + 5t - 4.9t^2)\mathbf{j}$$

(3)

(b) Find the value of T.

(3)

(c) Find the velocity of P at time t seconds $(0 \leqslant t \leqslant T)$.

(2)

When P is at the point B, the direction of motion of P is 45° below the horizontal.

(d) Find the time taken for P to move from A to B.

(2)

(e) Find the speed of P as it passes through B.

(2)

N 3 5 4 0 8 A 0 1 8 2 8

https://xtremepape.rs/

Leave blank

Question 6 continued

https://xtremepape.rs/

Leave blank

Question 6 continued

https://xtremepape.rs/

Leave blank

Question 6 continued

Q6

(Total 12 marks)

https://xtremepape.rs/

Leave blank

7.

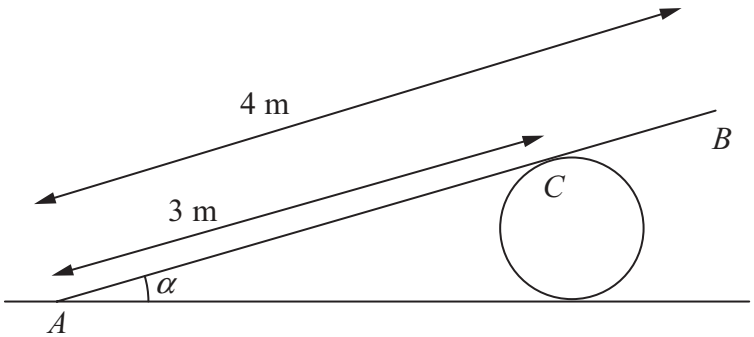

Figure 4

A uniform plank AB, of weight 100 N and length 4 m, rests in equilibrium with the end A on rough horizontal ground. The plank rests on a smooth cylindrical drum. The drum is fixed to the ground and cannot move. The point of contact between the plank and the drum is C, where $AC = 3$ m, as shown in Figure 4. The plank is resting in a vertical plane which is perpendicular to the axis of the drum, at an angle α to the horizontal, where $\sin\alpha = \frac{1}{3}$. The coefficient of friction between the plank and the ground is μ. Modelling the plank as a rod, find the least possible value of μ.

(10)

N 3 5 4 0 8 A 0 2 2 2 8

https://xtremepape.rs/

Leave blank

Question 7 continued

https://xtremepape.rs/

Leave blank

Question 7 continued

https://xtremepape.rs/

Leave blank

Question 7 continued

Q7

(Total 10 marks)

https://xtremepape.rs/

Leave blank

8. A particle P of mass m kg is moving with speed 6 m s^{-1} in a straight line on a smooth horizontal floor. The particle strikes a fixed smooth vertical wall at right angles and rebounds. The kinetic energy lost in the impact is 64 J. The coefficient of restitution between P and the wall is $\frac{1}{3}$.

(a) Show that $m = 4$.

(6)

After rebounding from the wall, P collides directly with a particle Q which is moving towards P with speed 3 m s^{-1}. The mass of Q is 2 kg and the coefficient of restitution between P and Q is $\frac{1}{3}$.

(b) Show that there will be a second collision between P and the wall.

(7)

N 3 5 4 0 8 A 0 2 6 2 8

https://xtremepape.rs/

Leave blank

Question 8 continued

https://xtremepape.rs/

Leave blank

Question 8 continued

Q8

(Total 13 marks)

TOTAL FOR PAPER: 75 MARKS

END

https://xtremepape.rs/